Catalog Numbers, Features and Ratings

- 1 PHASE, 3 WIRE, 120/240V ~
- MAIN BREAKER: 200A, 22K AIC MAIN BREAKER FACTORY INSTALLED
  MAIN LUG: 100K AIC MAX. RATED (SEE WIRING DIAGRAM FOR DETAILS)
- CONVERTIBLE MAIN LUG/MAIN BREAKER
- TYPE 3R OUTDOOR ENCLOSURE
- ANSI 61 GRAY POWDER COATED ENCLOSURE
- DESIGNED FOR USE WITH PLUG-ON NEUTRAL BREAKERS

Catalog Number	ENCLOSURE DIMS (inside) L	W	D	Amps Max	Number Spaces	Number Circuits	Bus Bar Material	Bus Bar Plating
PNW3048B1200C	35.00	14.25	4.50	200	30	48	Copper	Tin Plated
PNW3048L1200C	35.00	14.25	4.50	200	30	48	Copper	Tin Plated

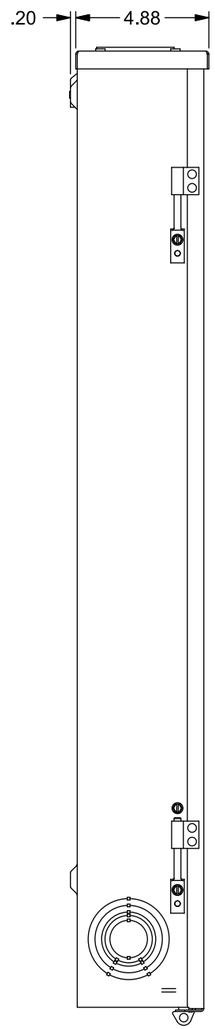

PNW3048B1200C
Main Breaker Load Center

VIEWS SHOWN WITH DEADFRONT REMOVED AND DOOR OPEN

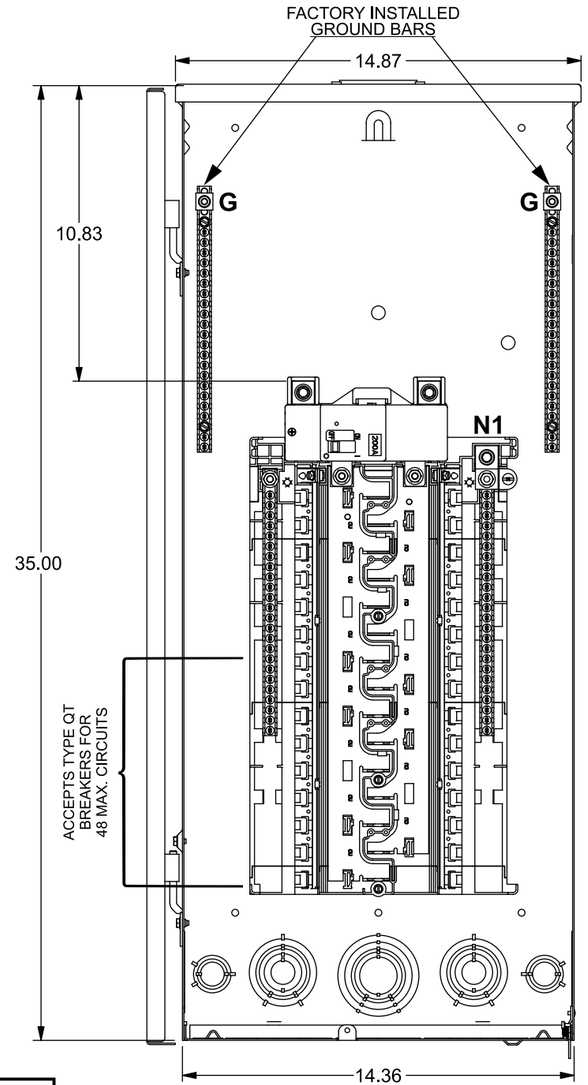

PNW3048L1200C
Main Lug Load Center
Same as Main Breaker except as shown

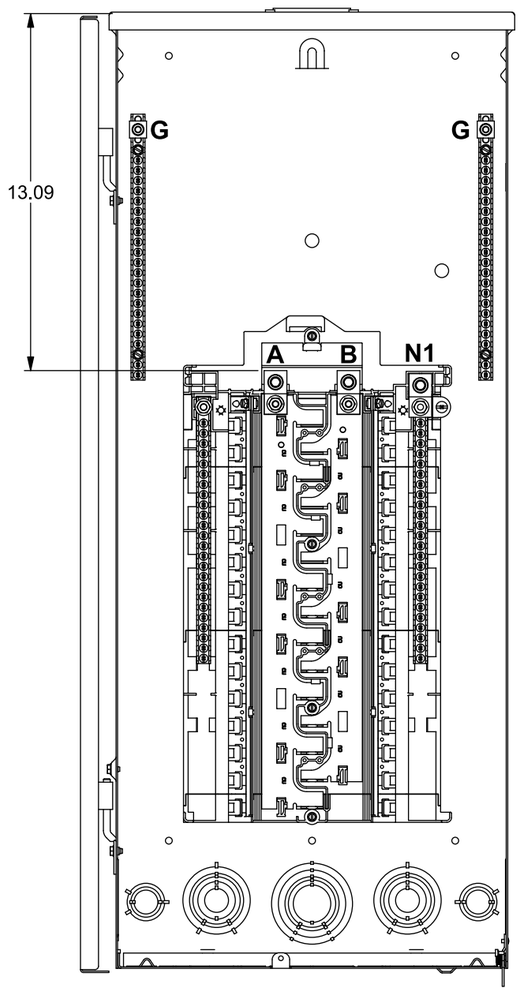

Trim/Door Detail

Main Breaker Load Center Shown

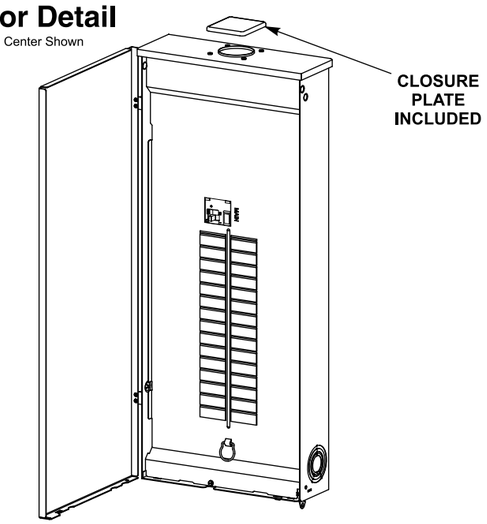

KO Diagram

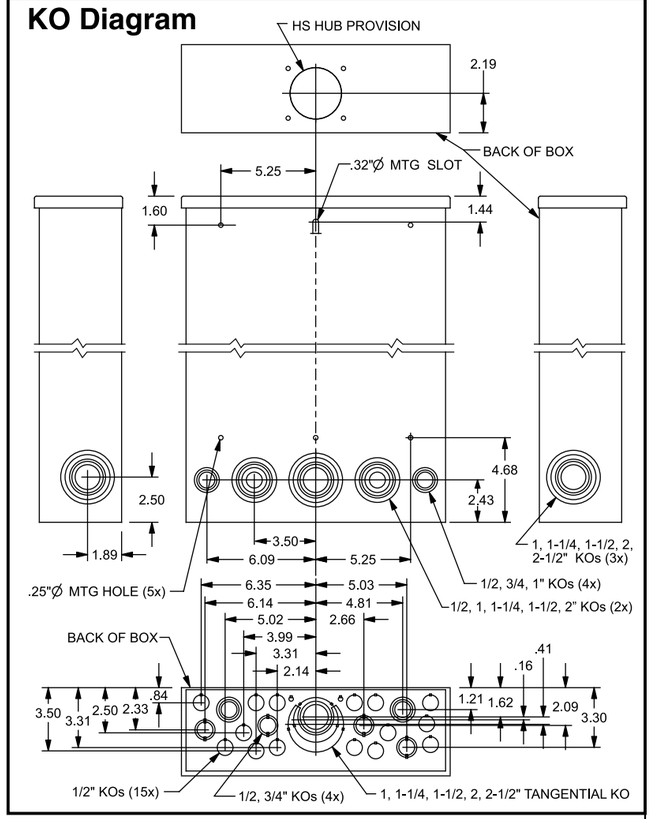

TERMINAL WIRE SIZES AND TORQUES

USE COPPER OR ALUMINUM 60°/75°C WIRE
SEE BREAKER MARKINGS FOR WIRE SIZE AND TORQUE REQUIREMENTS.

TERMINALS		WIRE	TORQUE
A, B, N1		300 kcmil - 4 AWG	250 LB-INS
G		2/0-4 AWG	110 LB-INS
NEUTRAL/GROUND BARS (USE TYPE EC2GB or EC3GB GND BAR KIT ACCESSORY)		10-14 CU/10-12 AL 8 AWG 6-4 AWG	20 LB-INS 25 LB-INS 35 LB-INS
GROUND CONDUCTORS ONLY		(2)or(3) 14 AWG (2) 12-10 AWG (2) 12-10 AWG	20 LB-INS 20 LB-INS 20 LB-INS
N2	ECLK2N NEUTRAL LUG	2/0 - 4 AWG	110 LB-INS
N2	ECLK3N NEUTRAL LUG	300 kcmil - 4 AWG	250 LB-INS
ECLK1-2 NEUTRAL LUG KIT ECLK2 NEUTRAL LUG KIT ECLK3 NEUTRAL LUG KIT		2/0-4 AWG 2/0-4 AWG 300 kcmil - 1 AWG	45 LB-INS 135 LB-INS 340 LB-INS
MAIN LUG/MAIN BRKR TO BUS CONNECTION (1/4-20 NUT)			45 LB-INS
BONDING SCREW			45 LB-INS

ACCESSORIES

REFER TO WIRING DIAGRAM FOR CORRECT ACCESSORY USAGE

ACCESSORIES DESCRIPTION	CAT. NO.
FILLER PLATE, 1"	QF3
QP HOLD-DOWN/BARRIER	ECMBR2
QNR LINE TERMINAL BARRIER	ECLTB3
SUBFEED LUG KIT	ECLK2125 ECLK2225
ARC FLASH LABEL	ECAFL
STANDBY PWR INTERLOCK KITS: ECSBPK01, ECSBPK02, ECSBPK05, ECSBPK07, ECSBPK10	

MAIN LUG / MAIN BREAKER KITS
USE APPROPRIATE KIT FROM CHART BELOW TO CONVERT PANEL

DESCRIPTION	CAT. NO.
150 AMP MAIN BREAKER	MBK150A
200 AMP MAIN BREAKER	MBK200A
150-225 AMP MAIN LUG	ECMLK225

CONDUIT HUBS TRADE SIZE	CAT. NO.
1 INCH	ECHS100
1-1/4 INCH	ECHS125
1-1/2 INCH	ECHS150
2 INCH	ECHS200
2-1/2 INCH	ECHS250

GROUND BAR KITS DESCRIPTION	CAT. NO.
TYPE EC2GB KIT, 12 SCREWS	EC2GB12
TYPE EC2GB KIT, 12 SCREWS, 2/0 LUG	EC2GB122
TYPE EC2GB KIT, 15 SCREWS	EC2GB15
TYPE EC2GB KIT, 15 SCREWS, 2/0 LUG	EC2GB152
TYPE EC3GB KIT, 21 SCREWS	EC3GB21
TYPE EC3GB KIT, 21 SCREWS, 2/0 LUG	EC3GB212
TYPE EC3GB KIT, 27 SCREWS	EC3GB27
TYPE EC3GB KIT, 27 SCREWS, 2/0 LUG	EC3GB272
TYPE EC3GB KIT, 30 SCREWS	EC3GB30
TYPE EC3GB KIT, 30 SCREWS, 2/0 LUG	EC3GB302
TYPE EC3GB KIT, 35 SCREWS, 2/0 LUG	EC3GB352

© 2020 Copyright Siemens Industry, Inc.

SIEMENS
Siemens Industry, Inc.

Load Center

Description: **PN Series, 1 Phase, Outdoor, 200A, 30 Pos, 48 Ckt, Main Breaker/Lug**

KAM 4/29/20 | DO NOT SCALE DRAWING | Dwg No: **PNW3048B-L1200C**