## Catalog Numbers, Features and Ratings

- 1 PHASE, 3 WIRE, 120/240V ~
- 100K AIC MAX. RATED (SEE WIRING DIAGRAM FOR DETAILS)
- CONVERTIBLE TO MAIN BREAKER
- INVERTIBLE
- TYPE N1 INDOOR ENCLOSURE
- ANSI 61 GRAY POWDER COATED ENCLOSURE (SEE CHART FOR TRIM/DOOR COLOR)
- DESIGNED FOR USE WITH PLUG-ON NEUTRAL BREAKERS

| Catalog Number | ENCLOSURE DIMS (Inside) L | W | D | Amps Max | Number Spaces | Number Circuits | Bus Bar Material | Bus Bar Plating | Trim Color |
|---|---|---|---|---|---|---|---|---|---|
| PN2448L1125C | 24.00 | 14.25 | 3.88 | 125 | 24 | 48 | Copper | None | Gray |
| PN2448L1125CW | 24.00 | 14.25 | 3.88 | 125 | 24 | 48 | Copper | None | White |

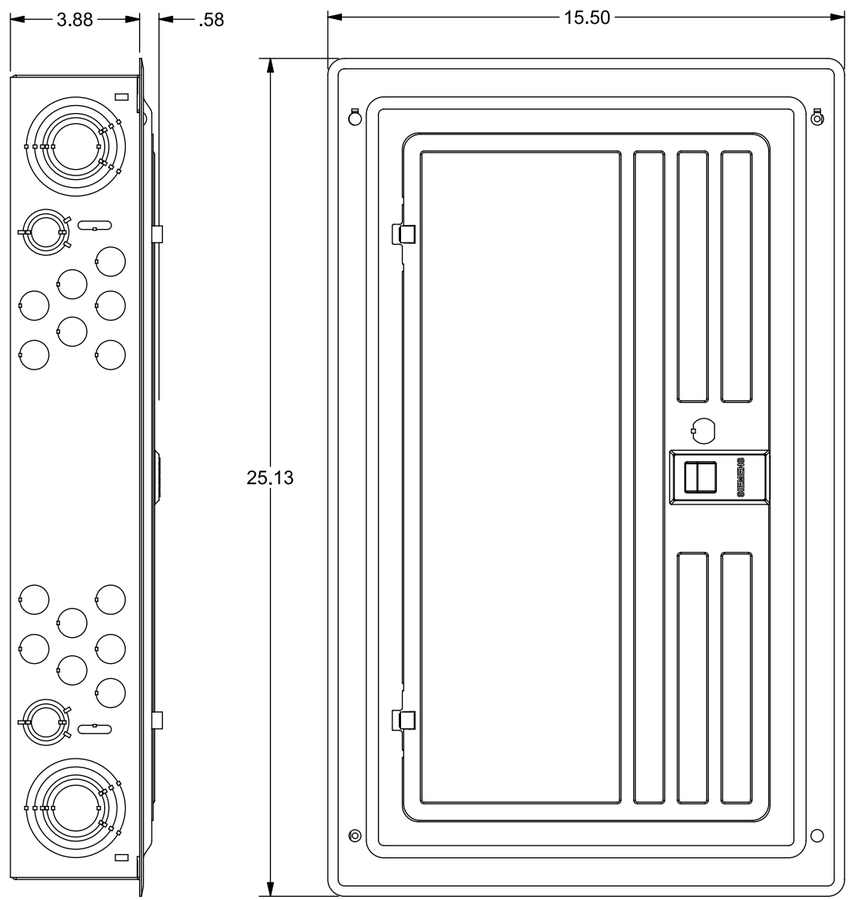


VIEW SHOWN WITH TRIM ASSEMBLY REMOVED

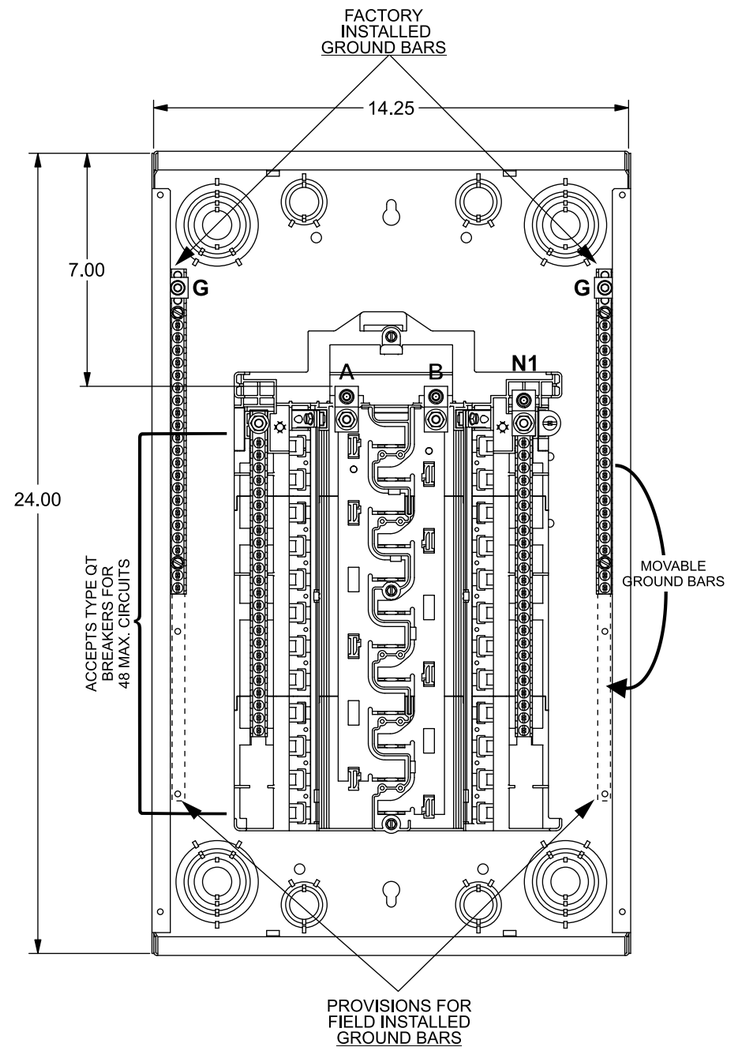


## Trim/Door Detail

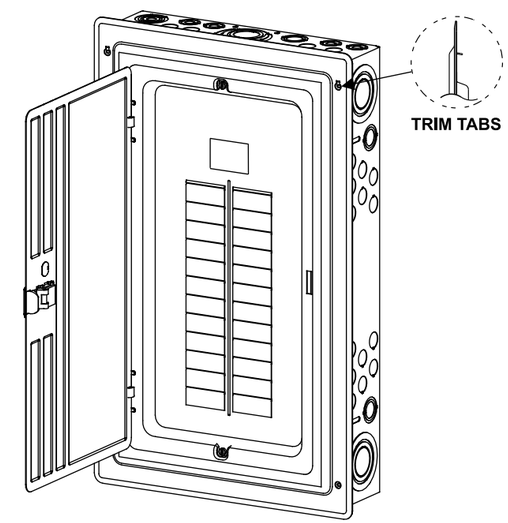


## KO Diagram

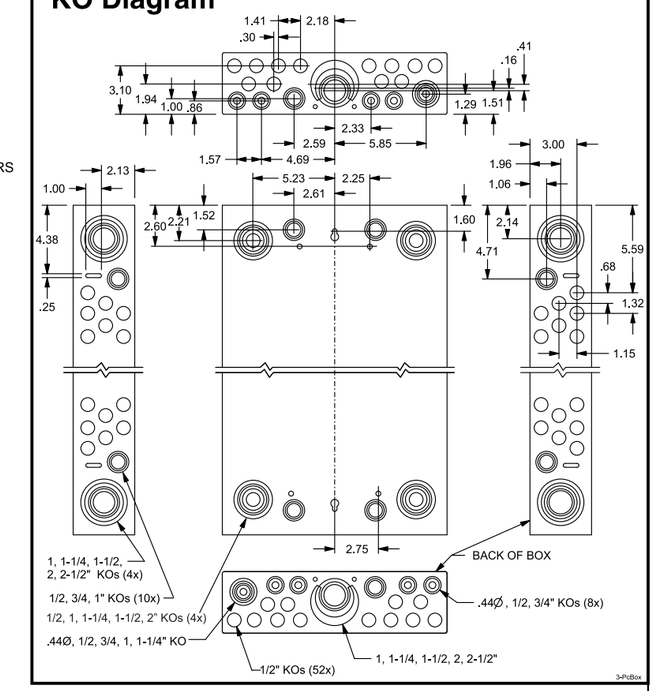


## TERMINAL WIRE SIZES AND TORQUES

**USE COPPER OR ALUMINUM 60°/75°C WIRE**

SEE BREAKER MARKINGS FOR WIRE SIZE AND TORQUE REQUIREMENTS

| TERMINALS | WIRE | TORQUE |
|---|---|---|
| A, B, G, N1 | 2/0 - 4 AWG | 110 LB-INS |
| MAIN BREAKER - LINE | 2/0 AWG CU; 3/0 AWG AL Max. | See Breaker |
| NEUTRAL/GROUND BARS (USE TYPE EC2GB or EC3GB GND BAR KIT ACCESSORY) | 10-14 CU/10-12 AL<br>8 AWG<br>6-4 AWG | 20 LB-INS<br>25 LB-INS<br>35 LB-INS |
| GROUND CONDUCTORS ONLY | (2)or(3) 14 AWG<br>(2) 12-10 AWG | 20 LB-INS<br>20 LB-INS |
| N2 ECLK2N NEUTRAL LUG | 2/0 - 4 AWG | 110 LB-INS |
| ECLK1-2 NEUTRAL LUG KIT | 2/0 - 4 AWG | 45 LB-INS |
| ECLK2 NEUTRAL LUG KIT | 2/0 - 4 AWG | 135 LB-INS |
| MAIN LUG/MAIN BRKR TO BUS CONNECTION (1/4-20 NUT) | | 45 LB-INS |
| BONDING SCREW | | 45 LB-INS |

## ACCESSORIES

**REFER TO WIRING DIAGRAM FOR CORRECT ACCESSORY USAGE**

| MAIN LUG / MAIN BREAKER KITS | |
|---|---|
| USE APPROPRIATE KIT FROM CHART BELOW TO CONVERT PANEL | |
| DESCRIPTION | CAT. NO. |
| 100 AMP MAIN BREAKER | MBK100A |
| 125 AMP MAIN BREAKER | MBK125A |
| 100-125 AMP MAIN LUG | ECMLK125 |

| ACCESSORIES | |
|---|---|
| DESCRIPTION | CAT. NO. |
| DOOR LOCK | ECQFL2 |
| FILLER PLATE, 1" | QF3 |
| BREAKER HOLD-DOWN/BARRIER | ECMBR2 |
| MAIN BREAKER FILLER PLATE | ECMBF125 |
| SUBFEED LUG KIT | ECLK2125 |
| STANDBY PWR INTERLOCK KITS: ECSBPK01, ECSBPK02, ECSBPK11 | |
| SURF. MOUNT SPACER KIT | ECSMK1 |
| ARC FLASH LABEL | ECAFL |

| GROUND BAR KITS | |
|---|---|
| DESCRIPTION | CAT. NO. |
| TYPE EC2GB KIT, 12 SCREWS | EC2GB12 |
| TYPE EC2GB KIT, 12 SCREWS, 2/0 LUG | EC2GB122 |
| TYPE EC2GB KIT, 15 SCREWS | EC2GB15 |
| TYPE EC2GB KIT, 15 SCREWS, 2/0 LUG | EC2GB152 |
| TYPE EC3GB KIT, 21 SCREWS | EC3GB21 |
| TYPE EC3GB KIT, 21 SCREWS, 2/0 LUG | EC3GB212 |
| TYPE EC3GB KIT, 27 SCREWS | EC3GB27 |
| TYPE EC3GB KIT, 27 SCREWS, 2/0 LUG | EC3GB272 |
| TYPE EC3GB KIT, 30 SCREWS | EC3GB30 |
| TYPE EC3GB KIT, 30 SCREWS, 2/0 LUG | EC3GB302 |
| TYPE EC3GB KIT, 35 SCREWS, 2/0 LUG | EC3GB352 |

© 2020 Copyright Siemens Industry, Inc.

**SIEMENS**
Siemens Industry, Inc.

**Load Center**

Description: **PN Series, 1 Phase, Indoor, 125A 24 Pos, 48 Ckt, Main Lug**

KAM 2/28/20 | DO NOT SCALE DRAWING | Dwg No: **PN2448L1125C-W**