# D225018
# Vaughn™ Single Handle Lavatory Faucet

## SPECIFICATIONS

### Features/Benefits

- 1.2 gpm(4.5 L/min) Maximum Flow Rate @60 psi
- Laminar Flow
- Ceramic Disc Cartridge
- Includes Metal Pop-Up Drain Assembly
- 4 1/8” Spout Height, 5 1/16” Spout Length
- Single Hole Mount
- Optional Deck Plate, DA663082, Sold Separately for 3 Hole Applications

### Available Color/Finishes

| Color | Description |
|---|---|
| | Chrome |

Please see danze.com or current price list for available finishes.
Finish is defined by additional suffix.

### Standards & Certifications

NSF/ANSI 372

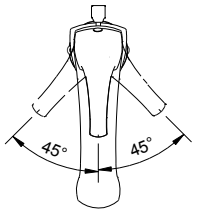


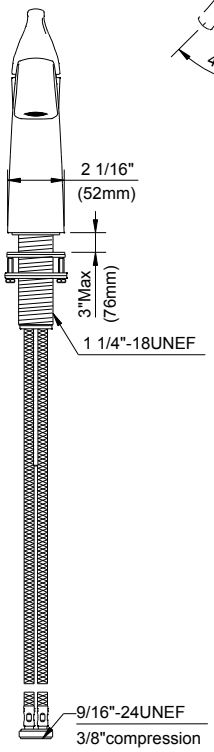


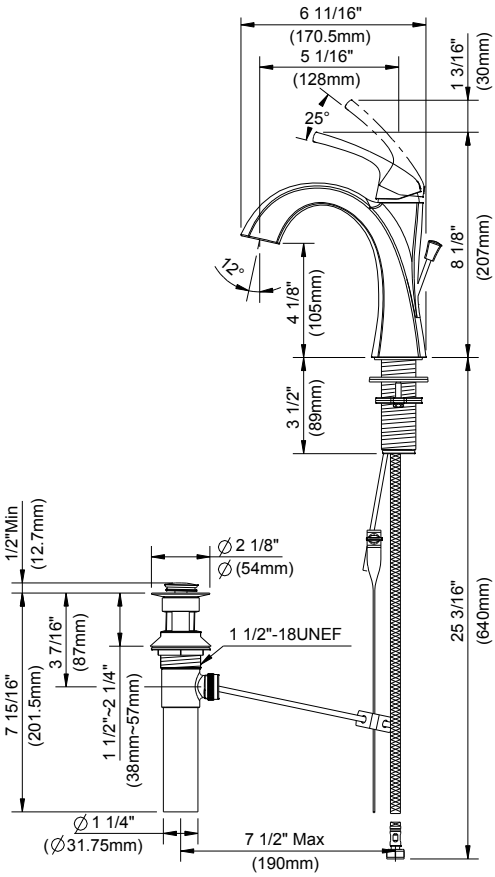


Submittal Information:

Name: _____ Contractor: _____

Location: _____ Contact #: _____

**WARRANTY:** Danze products are covered by a manufacturer’s lifetime limited warranty for manufacturing defects.