MECHANICAL JOINT C153 DUCTILE IRON COMPACT FITTINGS

UL and FM Listed

SAMPLE SPECIFICATIONS (Current ANSI/AWWA revisions apply)

Mechanical joint watermain fittings with accessories, 2” through 64” shall be manufactured from ductile iron in accordance with and meet all applicable terms and provisions of standards ANSI/AWWA C153/A21.53 and ANSI/AWWA C111/A21.11 Ductile iron mechanical joint fittings 2” through 24” shall be rated for 350 PSI working pressure. Ductile iron 30” through 48” shall be rated for 250 psi working pressure. Flanged ductile iron fittings in 24” (610 mm) and smaller sizes may be rated for 350 psi (2,413 kPa) with the use of special (annular ring or comparable) gaskets. All coated and lined fittings meet requirements of NSF-61, NSF-372, and Annex G.

NOTE - EXCEPTIONS: Mechanical joint fittings with flanged branches are rated for water pressure of 250 PSI.

NOTE - Fittings are cement lined and seal coated in accordance with ANSI/AWWA C104/A21.4. Fittings are available double cement-lined, bare, or epoxy coated upon request. Epoxy coating per ANSI/AWWA C116

NOTE - Installation per AWWA C600 and AWWA C651, current revision

Nominal Joint Dimensions in Inches

Size	A	B	C	D	F	Θ	X	J	K1	K2	L	M	N	O	S
2	2.51	2.50	3.50	3.60	2.61	28°	3/4	4.75	6.19	6.89	0.58	0.62	1.12	0.31	0.36
3	3.96	2.50	4.84	4.94	4.06	28°	3/4	6.19	7.62	7.69	0.58	0.62	1.37	0.31	0.39
4	4.80	2.50	5.92	6.02	4.90	28°	7/8	7.50	9.06	9.12	0.60	0.75	1.50	0.31	0.39
6	6.90	2.50	8.02	8.12	7.00	28°	7/8	9.50	11.06	11.12	0.63	0.88	1.63	0.31	0.43
8	9.05	2.50	10.17	10.27	9.15	28°	7/8	11.75	13.31	13.37	0.66	1.00	1.75	0.31	0.45
10	11.10	2.50	12.22	12.34	11.20	28°	7/8	14.00	15.62	15.62	0.70	1.00	1.75	0.31	0.47
12	13.20	2.50	14.32	14.44	13.30	28°	7/8	16.25	17.88	17.88	0.73	1.00	1.75	0.31	0.49
14	15.30	3.50	16.40	16.54	15.44	28°	7/8	18.75	20.25	20.25	0.79	1.25	2.00	0.31	0.55
16	17.40	3.50	18.50	18.64	17.54	28°	7/8	21.00	22.50	22.50	0.85	1.31	2.06	0.31	0.58
18	19.50	3.50	20.60	20.74	19.64	28°	7/8	23.25	24.75	24.75	1.00	1.38	2.13	0.31	0.68
20	21.60	3.50	22.70	22.84	21.74	28°	7/8	25.50	27.00	27.00	1.02	1.44	2.19	0.31	0.69
24	25.80	3.50	26.90	27.04	25.94	28°	7/8	30.00	31.50	31.50	1.02	1.56	2.31	0.31	0.75
30	32.00	4.00	33.29	33.46	32.17	20°	1 1/8	36.88	39.12	39.12	1.31	2.00	2.75	0.38	0.82
36	38.30	4.00	39.59	39.76	38.47	20°	1 1/8	43.75	46.00	46.00	1.45	2.00	2.75	0.38	1.00
42	44.50	4.00	45.79	45.96	44.67	20°	1 3/8	50.62	53.12	53.12	1.45	2.00	2.75	0.38	1.35
48	50.80	4.00	52.09	52.26	50.97	20°	1 3/8	57.50	60.00	60.00	1.45	2.00	2.75	0.38	1.35
54	---	---	---	---	---	--	---	---	---	---	--	--	--	--	--
60	---	---	---	---	---	--	---	---	---	---	--	--	--	--	--
64	---	---	---	---	---	--	---	---	---	---	--	--	--	--	--

NOTE:Contact Tyler Union for details on 54” through 64”

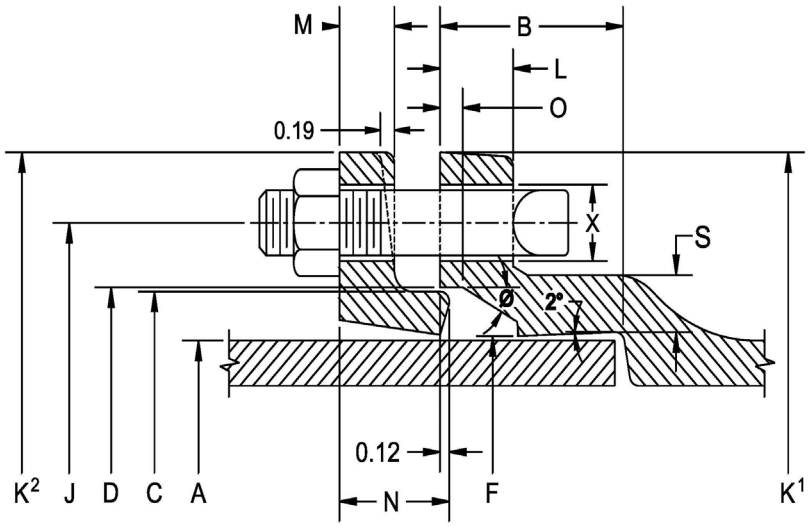

ANSI/AWWA C153 Mechanical Joint Fittings

TYLER UNION®

Bends

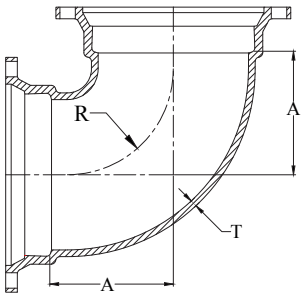

90° (1/4) Bend

	Domestic				Non-Domestic		
Size	T	A	R	Weight	T	A	Weight
3	0.34	3.5	2.5	19	0.33	3.5	19
4	0.35	4.0	3.0	24	0.34	4.0	25
6	0.37	6.0	5.0	41	0.36	5.0	39
8	0.39	7.0	6.0	64	0.38	6.5	57
10	0.41	7.5	6.5	89	0.40	7.5	89
12	0.43	9.0	8.0	114	0.42	9.0	108
14	0.51	12.0	11.5	210	0.47	11.5	210
16	0.52	13.0	12.5	268	0.50	12.5	264
18	0.59	15.5	14.0	375	0.54	14.0	335
20	0.60	17.0	15.5	443	0.57	15.0	400
24	0.62	17.0	15.5	663	0.61	16.75	565
30	0.66	21.5	19.0	1005	0.66	21.5	930
36	0.74	24.5	22.0	1540	0.74	24.5	1450
42	0.82	29.25	26.7	2380	0.82	29.25	2205
48	0.90	33.25	30.8	3084	0.90	33.25	2990

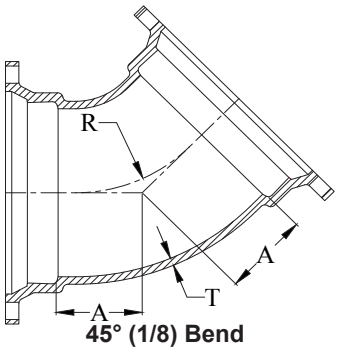

45° (1/8) Bend

Domestic			Non-Domestic	
A	R	Weight	A	Weight
2.0	2.41	17	1.5	16
2.5	3.56	22	2.0	22
3.5	7.25	36	3.0	32
4.0	8.44	50	3.5	46
5.0	10.88	76	4.5	70
5.98	13.25	108	5.5	86
5.5	12.06	156	5.0	160
5.5	10.42	191	5.5	202
6.0	11.18	252	6.0	250
7.0	13.59	303	7.0	305
7.5	14.89	398	7.5	405
10.5	9.31	850	10.5	780
11.5	21.73	1135	11.5	1135
14.0	27.76	1675	14.0	1610
15.0	30.17	2196	15.0	2090

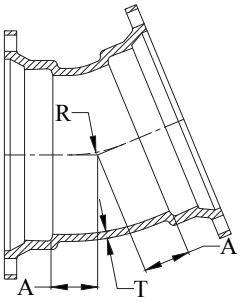

22½° (1/16) Bend

	Domestic			Non-Domestic	
Size	A	R	Weight	A	Weight
3	1.5	2.51	16	1.0	15
4	1.75	3.81	19	1.5	18
6	2.25	6.35	31	2.0	31
8	2.85	11.80	50	2.5	46
10	3.35	14.35	67	3.0	64
12	3.86	16.90	81	3.5	80
14	3.93	17.25	139	3.75	136
16	3.98	17.50	172	3.75	172
18	4.5	15.11	275	4.5	255
20	4.5	15.07	341	4.5	310
24	4.5	15.51	333	4.5	366
30	6.75	21.36	670	6.75	665
36	7.75	26.39	978	7.75	960
42	9.0	32.68	1352	9.0	1350
48	10.0	27.70	1757	10.0	1760

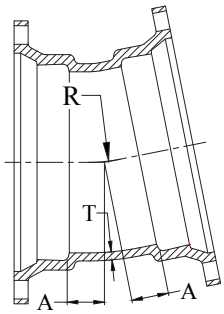

11¼° (1/32) Bend

Domestic			Non-Domestic	
A	R	Weight	A	Weight
1.25	2.53	15	1.0	14
1.5	5.12	19	1.3	16
1.5	5.12	29	1.5	30
2.06	15.80	44	1.8	42
2.32	18.36	58	2.0	58
2.56	20.90	68	2.3	67
2.59	21.25	123	2.5	93
2.62	21.50	145	2.5	148
3.0	16.52	205	3.0	205
3.0	15.23	245	3.0	245
3.0	16.1	304	3.0	315
4.75	22.84	551	4.8	600
5.0	25.38	870	5.0	820
6.0	35.54	1163	6.0	1180
6.5	40.61	1474	6.5	1475

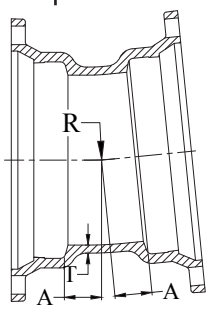

5 5/8° (1/64) Bend

Non-Domestic		
A	R	Weight
1.25	5.08	16
1.5	7.61	18
1.5	10.15	29
1.75	12.69	45
2.0	15.23	59
2.3	17.77	82
2.5	20.31	136
2.5	20.31	157
3.0	25.38	283
3.0	25.38	374
3.0	25.38	487
3.75	32.97	600
4.0	34.55	820
5.0	42.71	1180
5.5	47.35	1475

23U - ANSI/AWWA C153/A21.53
Mechanical Joint Compact
Ductile Iron Fittings
Revised 3/2017

☐ **DOMESTIC** ☐ **NON-DOMESTIC**

SUBMITTAL: C153 MECHANICAL JOINT PRODUCT

(Current revisions for the noted Standards apply)

SIZES: 2" - 64" (2" not included in ANSI/AWWA C153 standard)

STANDARDS: ANSI/AWWA C153/A21.53, NFPA13/24, 3"-16" UL and 3"-10" FM listed & approved (File - Tyler Union)

MATERIAL: Cast of ASTM A536 qualified ductile iron. Date code is cast on and required for traceability.

PRESSURE RATING: *Flanged fittings rated at 250 psi. Mechanical joints 2" – 24" rated at 350 psi and 30" – 48" at 250 psi.
*Note: With rubber annular ring flange gasket, 2" – 24" Flanged fittings can be rated at 350 psi.
Note: Wyes over 12" are not pressure rated. Contact Tyler Union for rating in your application.

DEFLECTION: Joint deflection 5° max for 2"– 12" and 3° max for 14"– 48". Reduces by 50% at nominal pipe & fitting diameters

NSF-61 & NSF372: Meets all requirements including Annex G, Tyler Union's Underwriters Laboratory listing MH16439.

ASPHALT COATING: Per ANSI/AWWA C104/A21.4 and ANSI/AWWA C153/A21.53.

CEMENT LINING: Per ANSI/AWWA C104/A21.4, with double cement lining.

EPOXY COATING: Fusion bonded epoxy per ANSI/AWWA C116/A21.16. Additional coatings available upon request.

BARE FITTINGS: Available upon request.

FASTNERS: High strength low alloy weathering steel per ANSI/AWWA C111/A21.11 and ASTM A242

INSTALLATION: Install per AWWA C600/C651 using pipe conforming to ANSI/AWWA C151/A21.51 or AWWA C900/905.

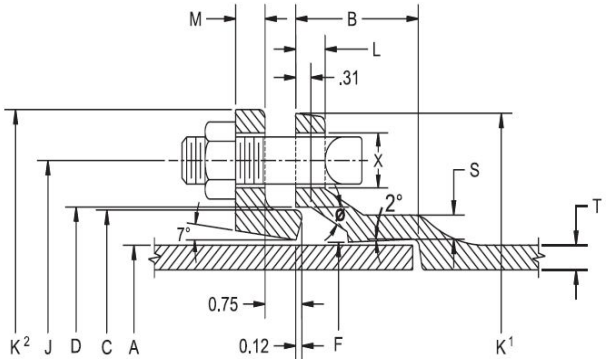

NOMINAL JOINT DIMENSIONS IN INCHES														BOLTS	
Size Inches	A Dia. DI Pipe	B Hub Depth	C Dia. GLAND	D Dia.	F Dia.	J Dia. GLAND	K¹ Dia.	K² Dia. GLAND	L	M GLAND	S	T	X	Size	Qty.
2	2.51	2.50	3.50	3.60	2.61	4.75	6.19	6.89	0.58	0.62	0.36	0.30	3/4	5/8x3	2
3	3.96	2.50	4.84	4.94	4.06	6.19	7.62	7.69	0.58	0.62	0.39	0.33	3/4	5/8x3	4
4	4.80	2.50	5.92	6.02	4.90	7.50	9.06	9.12	0.60	0.75	0.39	0.34	7/8	3/4x3-1/2	4
6	6.90	2.50	8.02	8.12	7.00	9.50	11.06	11.12	0.63	0.88	0.43	0.36	7/8	3/4x3-1/2	6
8	9.05	2.50	10.17	10.27	9.15	11.75	13.31	13.37	0.66	1.00	0.45	0.38	7/8	3/4x4	6
10	11.10	2.50	12.22	12.34	11.20	14.00	15.62	15.62	0.70	1.00	0.47	0.40	7/8	3/4x4	8
12	13.20	2.50	14.32	14.44	13.30	16.25	17.88	17.88	0.73	1.00	0.49	0.42	7/8	3/4x4	8
14	15.30	3.50	16.40	16.54	15.44	18.75	20.31	20.25	0.79	1.25	0.55	0.47	7/8	3/4x4-1/2	10
16	17.40	3.50	18.50	18.64	17.54	21.00	22.56	22.50	0.85	1.31	0.58	0.50	7/8	3/4x4-1/2	12
18	19.50	3.50	20.60	20.74	19.64	23.25	24.83	24.75	1.00	1.38	0.68	0.54	7/8	3/4x4-1/2	12
20	21.60	3.50	22.70	22.84	21.74	25.50	27.08	27.00	1.02	1.44	0.69	0.57	7/8	3/4x4-1/2	14
24	25.80	3.50	26.90	27.04	25.94	30.00	31.58	31.50	1.02	1.56	0.75	0.61	7/8	3/4x5	16
30	32.00	4.50	33.29	33.46	32.17	36.88	39.12	39.12	1.31	2.00	0.82	0.66	1-1/8	1x6	20
36	38.30	4.50	39.59	39.76	38.47	43.75	46.00	46.00	1.45	2.00	1.00	0.74	1-1/8	1x6	24
42	44.50	4.50	45.79	45.96	44.67	50.62	53.12	53.12	1.45	2.00	1.25	0.82	1-3/8	1-1/4x6-1/2	28
48	50.80	4.50	52.09	52.26	50.97	57.50	60.00	60.00	1.45	2.00	1.35	0.90	1-3/8	1-1/4x6-1/2	32
54	Available on Request														
60	Available on Request														
64	Available on Request														

Anniston: 1501 W 17th St. ● Anniston, AL 36201 ● (800) 226-7601
Corona: 1001 El Camino Ave. ● Corona, CA 92879 ● (866) 527-8471
Tyler: 11910 CR 492 ● Tyler, Texas 75706 ● (800) 527-8478
Dallas: 1201 Ave. S. Suite100 ● Grande Prairie, TX 75050
Elmer: 701 Kenyon Ave.● Elmer, New Jersey 03318
New Lenox: 2200 West Haven● New Lenox, IL 60451
Portland: 15670 N. Lombard St. ● Portland, OR 97203
Oxford: 1800 Greenbrier Dear Road ●Anniston, AL 36207