Curved Blade Ceiling Diffuser- 3 Way

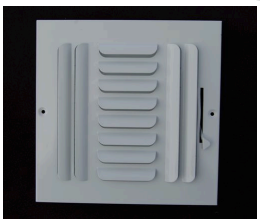

- *Three way deflection*
- *Stamped curved blade face*
- *Multi louver damper*
- *Damper is riveted- will not rattle*
- *Steel handle operator*
- *Countersunk mounting holes*
- *2" long tri-head screws*
- *Other sizes available upon request*
- *Baked powder coat finish*

3CB

Item #	Size	Qty/ Box
3CB0804W	8X4	30
3CB0806W	8X6	20
3CB0808W	8X8	20
3CB1004W	10X4	30
3CB1006W	10X6	20
3CB1008W	10X8	20
3CB1010W	10X10	10
2CB1204W	12X4	20
3CB1206W	12X6	20
3CB1208W	12X8	20
3CB1212W	12X12	10
2CB1404W	14X4	20
3CB1406W	14X6	20
3CB1408W	14X8	20
3CB1414W	14X14	10

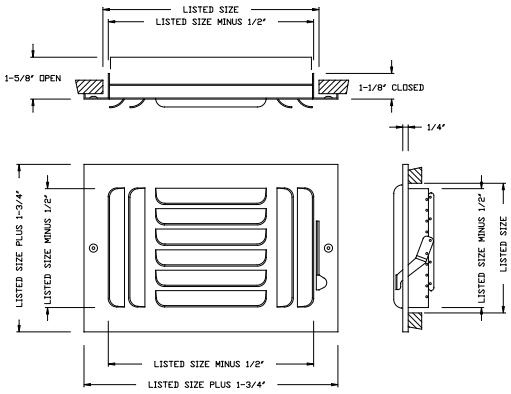

Curved Blade Ceiling Diffuser- 4 Way

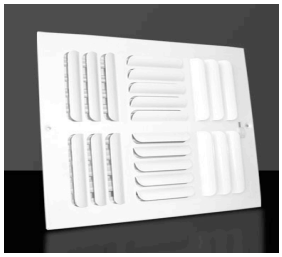

- *Four way deflection*
- *Stamped curved blade face*
- *Multi louver damper*
- *Damper is riveted- will not rattle*
- *Steel handle operator*
- *Countersunk mounting holes*
- *2" long tri-head screws*
- *Baked powder coat finish*

4CB

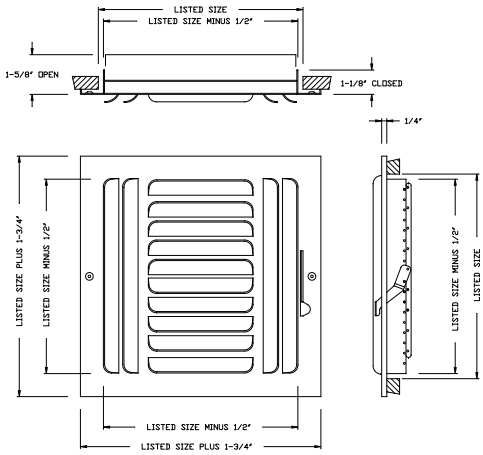

Item #	Size	Qty/ Box
4CB0606W	6X6	20
4CB0808W	8X8	20
4CB1010W	10X10	10
4CB1212W	12X12	10
4CB1414W	14X14	10