13AJN

Parts List
07-April-2016

This parts list is current as of the above revision date.
See http://www.rheempartslists.net/92-42805-13AJN.pdf for the current revision.

Condensing Units

No.	Notes	MODEL COOLING CAPACITY VARIATION	13AJN 18 A01	13AJN 24 A01	13AJN 30 A01	13AJN 36 A01
		ELECTRICAL/FAN GROUP				
7	Stk	Fan Motor - Before Date Code 2112	51-101774-04	51-101774-04	51-101774-02	51-101774-02
7	Stk	Fan Motor - On or After Date Code 2112	See Below		51-101774-02	51-101774-02
9	Stk	Fan Blade - Before Date Code 2112	70-102033-05	70-102033-05	70-102011-16	70-102011-16
9	Stk	Fan Blade - On or After Date Code 2112	See Below		70-102011-16	70-102011-16
16	Stk	Contactor	42-102851-01	42-102851-01	42-102851-01	42-102851-01
17		Low Voltage Cover	See Panels - Miscellaneous			
18		Control Box Bottom	AE-100655-01	AE-100655-01	AE-100655-01	AE-100655-01
19		Capacitor - Compressor/Fan	See Compressor Group			

No.	Notes	MODEL COOLING CAPACITY VARIATION	13AJN 18 A01	13AJN 24 A01		
		ELECTRICAL/FAN GROUP (Date Code 2112 - 1413)				
7	Stk	Fan Motor - Date Code 2112 - 1413	51-101774-20	51-101774-20		
9	Stk	Fan Blade - Date Code 2112 - 1413	70-102011-21	70-102011-21		
16	Stk	Contactor	42-102851-01	42-102851-01		
17		Low Voltage Cover	See Panels - Miscellaneous			
18		Control Box Bottom	AE-100655-01	AE-100655-01		
19		Capacitor - Compressor/Fan	See Compressor Group			
		ELECTRICAL/FAN GROUP (On or After Date Code 1413)				
		After this date, different fan, motor and capacitor combinations may have been used interchangeably in production. If replacement of any component is required, all three parts should be replaced. For further information - See Note 1				
7	Stk,1	Fan Motor	51-104691-01	51-104691-01		
19	1	Capacitor - Compressor/Fan (2 inch diameter, 30/3/370)	43-101665-03	N/A		
19	1	Capacitor - Compressor/Fan (2 inch diameter, 35/3/370)	N/A	43-101665-04		
9	Stk,1	Fan Blade (2 Blade)	70-102033-08	70-102033-08		

No.	Notes	MODEL COOLING CAPACITY VARIATION	13AJN 42 A01	13AJN 48 A01	13AJN 60 A01	
		ELECTRICAL/FAN GROUP				
7	Stk	Fan Motor	51-102008-07	51-102008-07	51-102008-07	
9	Stk	Fan Blade	70-101323-19	70-102011-10	70-102011-10	
16	Stk	Contactor	42-102851-01	42-102851-03	42-102851-03	
17		Low Voltage Cover	See Panels - Miscellaneous			
18		Control Box Bottom	AE-100655-01	AE-100655-01	AE-100655-01	
19		Capacitor - Compressor/Fan	See Compressor Group			

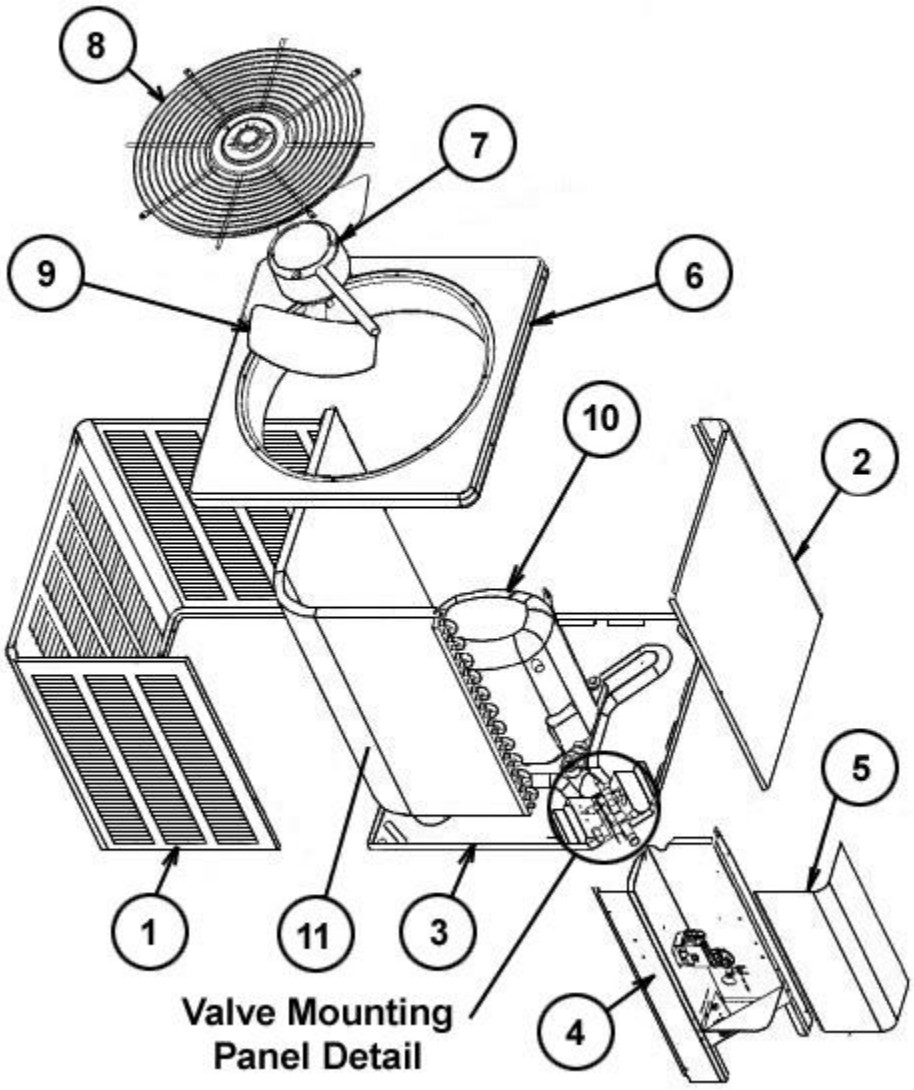

Exploded View